# **LOCKIN** U30 Inlaying system

## Elements

V24.01

1 LOCKIN beam
2 LOCKIN locking plate SET
3 LOCKIN beam connector

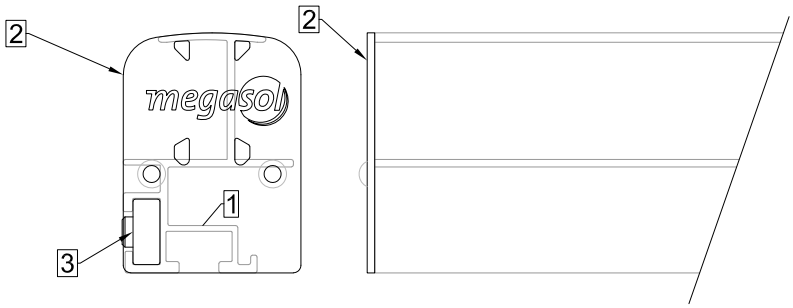


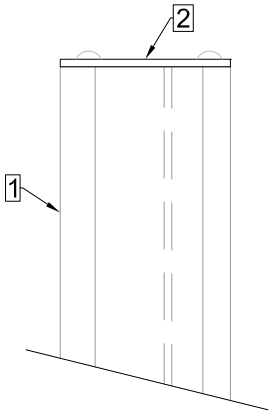


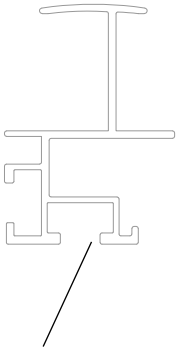

Megasol sheet metal adapter connection,
M10 screw head
(e.g. DIN 933 / DIN 931 or ISO 4017 / ISO 4014 with S17)
and Schletter components

**INSTALLATION OF LOCKIN COMPONENTS**

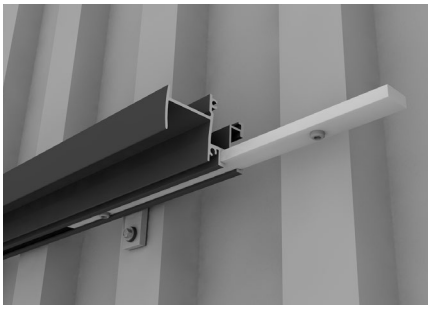

LOCKIN beam connector
Slide the beam connector into the LOCKIN beam and secure it with the grub screw.

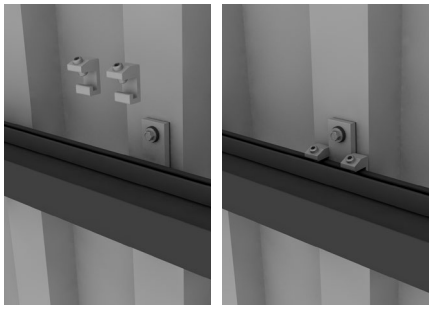

LOCKIN stopper
Position the stoppers on the LOCKIN beam at the designated fixing point, on both sides of the mounting component, and secure them with the grub screw.



LOCKIN locking plate
Fit the locking plate to the end of the LOCKIN beam.

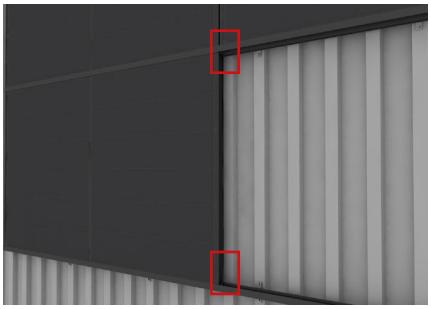



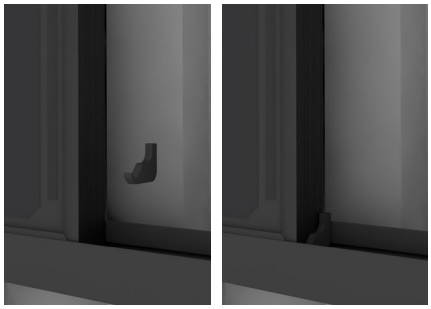

LOCKIN spacer O4-10-30 (top) / LOCKIN spacer U4-30 (bottom)
Place the LOCKIN spacer in the LOCKIN beam before inserting the next module.

Further information on installing the modules: Assembly instructions for U-frame modules

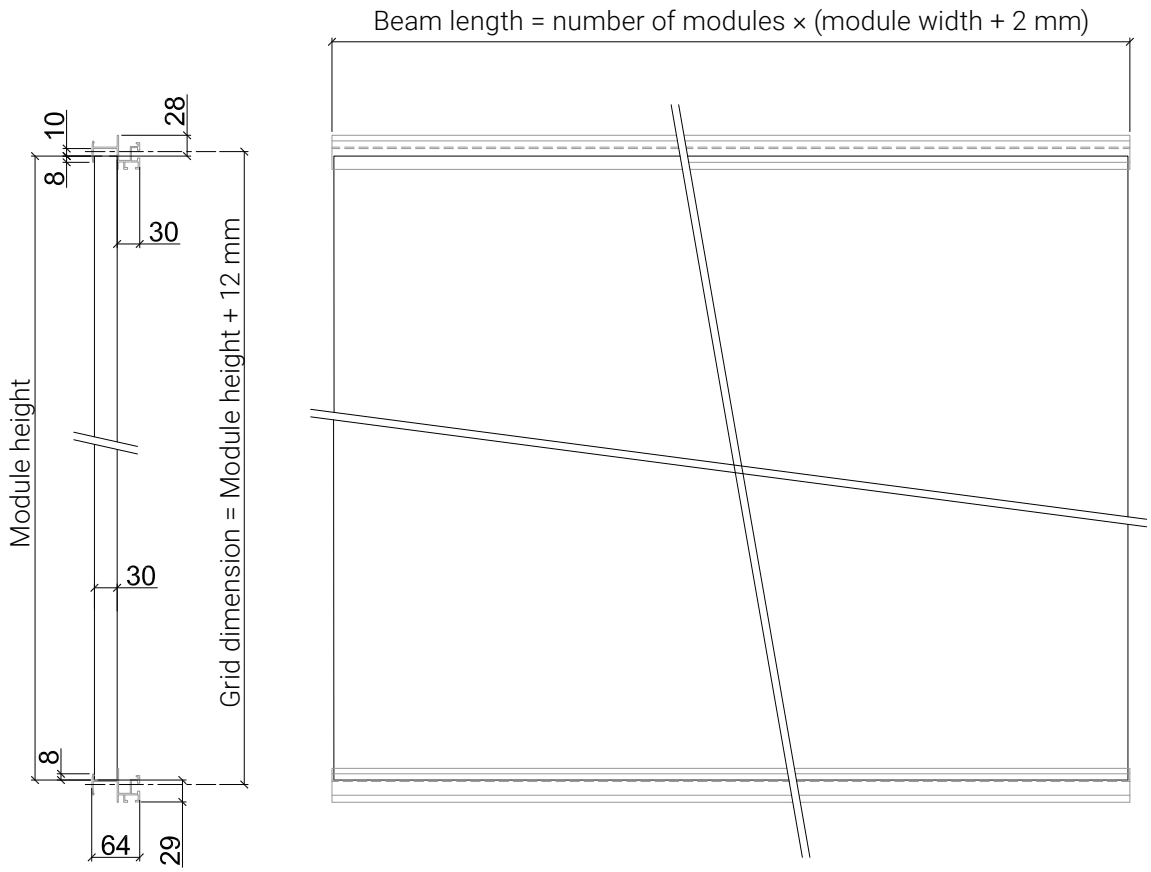


Calculation example: beam length: 3 × (1773 mm + 2 mm) = 5325 mm

If several beams are joined together, expansion joints must be provided.
It is recommended that the module array be spaced at intervals of 60 mm after approximately 12 metres.

# **LOCKIN** U30 Inlaying system

## Span & cantilever for landscape installation (1.05 m)

V24.01

- Spans / cantilever lengths in millimetres
- Area load in kN/m², characteristic value without load factors
- Distance between LOCKIN beams: approx. 1.05 m (grid dimension)
- The LOCKIN system must be fixed to a suitable substructure designed to withstand the mechanical stresses caused by wind, snow and the self-weight of the modules.
- System weight: approx. 14 kg/m²

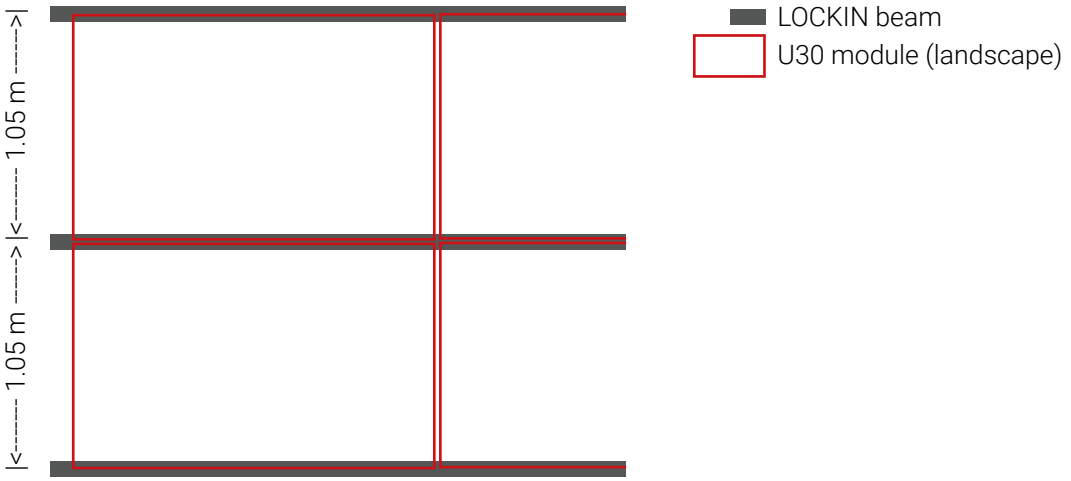


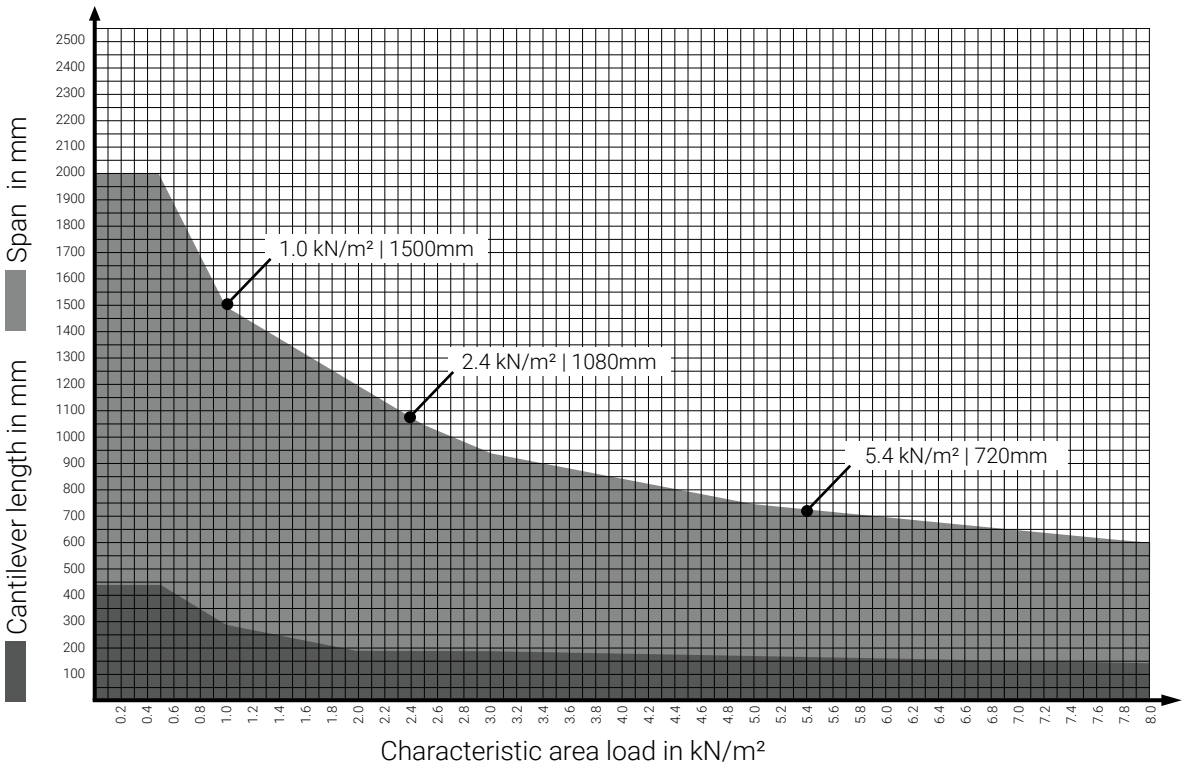

# **LOCKIN** U30 Inlaying system

## Span & cantilever for landscape installation (1.15 m)

V24.01

- Spans / cantilever lengths in millimetres
- Area load in kN/m², characteristic value without load factors
- Distance between LOCKIN beams: approx. 1.15 m (grid dimension)
- The LOCKIN system must be fixed to a suitable substructure designed to withstand the mechanical stresses caused by wind, snow and the self-weight of the modules.
- System weight: approx. 14 kg/m²

